深圳市宏聚电子有限公司

HONGJU(CHENZHEN)ELECTRONIC CO.,LTD

MR-2

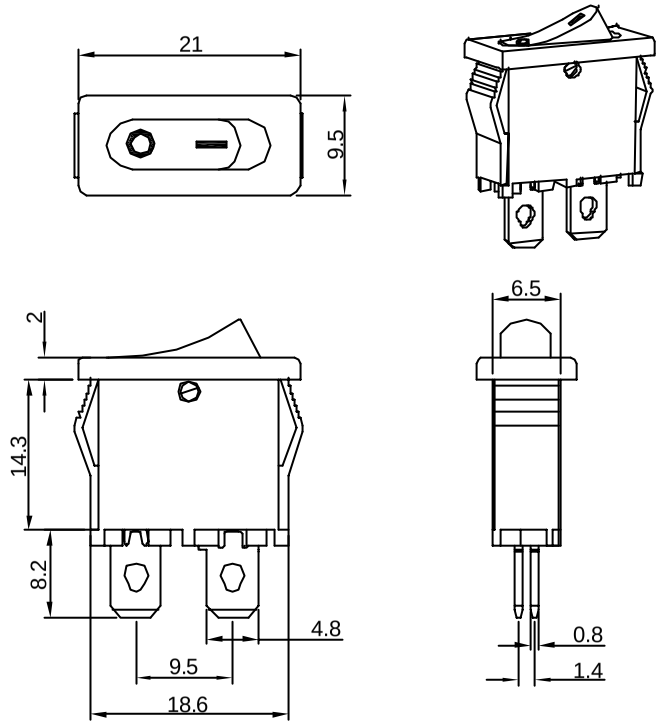

Rating: 10A 125V AC (UL CUL)
6A 250V AC (UL CUL VDE CB)
Contact Resistance: 50m O Max
Insulation Resistance: DC 500V 100M O Min
Dielectric Strength: AC1500V 1 minute
Dlectrical life: 10,000 cycles
Operating Temperature: 0℃~85℃

CUT-OUT

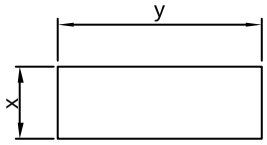

	X	Y
0.75~1.25	6.8-0.1	19.2± 0.1
1.25~2.00	6.8-0.1	19.2± 0.1
2.00~3.00	6.8-0.1	19.2± 0.1

SWITCHING CIRCUIT

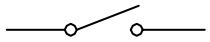

MATERIAL:

Body:Nylon66,UL rated:94V-2 min
Actuator:Nylon66,UL rated:94V-2 min
Terminal:Brass,silver or tin plated

修正 REVISION	说明 DESCRIPTION	核准 APPROVAL BY	公差 TOLEANCES	.X± 0.3 .XX± 0.15	角度 ANGLE 1°		单位 DIMENSION UNIT mm.				
			绘图 DRAWN BY	李双	设计 DESIGNED BY	李双	比例尺 SCALE	1:1	品名 TITLE	图号 DRAWING NO	材质 MATERAL	处理 FINISH
			核对 CHECKED BY	李新超	核准 APPROVED BY	李新超	日期 DATE	2006 08 17	MR-2-110-C5N-BB			