东莞市宏聚电子五金制品有限公司

HONGJU(DONGGUAN)ELECTRONIC & METAL PRODUCTS CO.,LTD

R-4

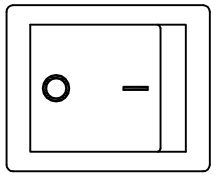

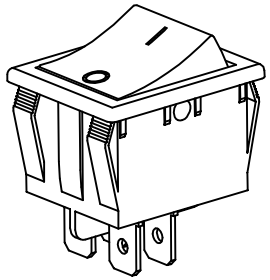

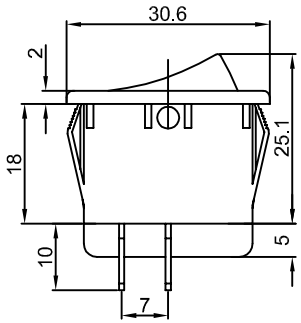

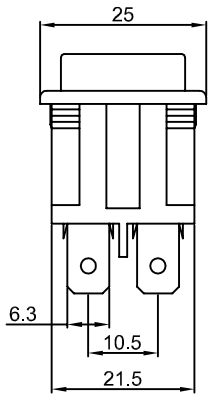

Rating: 16A 125V AC (UL CUL) c UL us
16A 250V AC (UL CUL VDE CB)
Contact Resistance: 50mΩ Max
Insulation Resistance: DC 500V 100MΩ Min
Dielectric Strength: AC1500V 1 minute
Dlectrical life: 10,000 cycles
Operating Temperature: 0℃~85℃

CUT-OUT

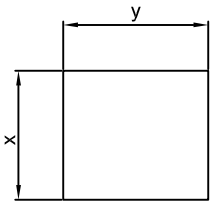

	X	Y
0.75~1.25	28.0+0.10	22.0+0.10
1.25~2.00	28.2+0.10	22.0+0.10
2.00~3.00	28.4+0.10	22.0+0.10

SWITCHING CIRCUIT

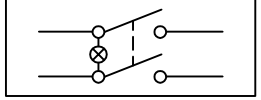

MATERIAL:

Body:Nylon66,UL rated:94V-2 min
Actuator:PC,UL rated:94V-2 min
Terminal:Brass,silver or tin plated

Marking	x	0	1	2	3	4	5	7	8
	柄	None	•	ON OFF	=	−	I O	Front/前进 Back/后退	Front Back

修 正 REVISION	说 明 DESCRIPTION	核 准 APPROVAL BY	公 差 TOLEANCES	.X±0.3 .XX±0.15 角度 ANGLE 1°	单位 DIMENSION UNIT mm.						
			绘 图 DRAWN BY	李双	设 计 DESIGNED BY	李双	比例尺 SCALE	1:1	品 名 TITLE	图 号 DRAWING NO	材 质 MATERAL	处 理 FINISH
			核 对 CHECKED BY	李新超	核 准 APPROVED BY	李新超	日 期 DATE	2006 08 17	R-4-210-CXL-BR			