深圳市宏聚电子有限公司

HONGJU (SHENZHEN) ELECTRIC CO.,LTD

MR-1

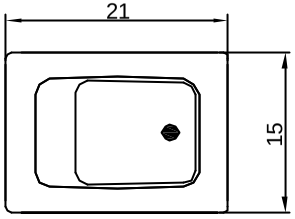

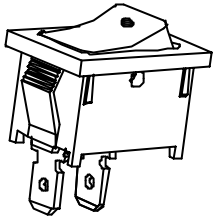

Rating: 10A 125V AC (UL CUL)
6A 250V AC (UL CUL VDE CB)
Contact Resistance: 50m O Max
Insulation Resistance: DC 500V 100M O Min
Dielectric Strength: AC1500V 1 minute
Dlectrical life: 10,000 cycles
Operating Temperature: 0℃~85℃

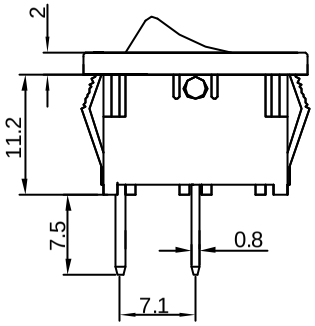

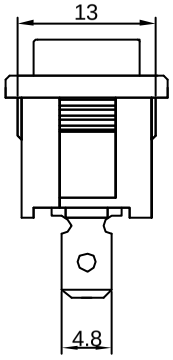

CUT-OUT

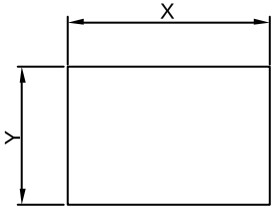

	X	Y
0.75~1.25	19.2-0.1	13.0+0.1
1.25~2.00	19.4-0.1	13.0+0.1
2.00~3.00	19.8-0.1	13.0+0.1

MATERIAL:
Body:Nylon66,UL rated:94V-2 min
Actuator:Nylon66,UL rated:94V-2 min
Terminal:Brass,silver or tin plated

SWITCHING CIRCUIT

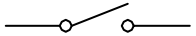

X	0	1	2	3	4	5	7	8	9	A
Marking	none		ON OFF				ON/开 OFF/关		O/I	

修正 REVISION	说明 DESCRIPTION	核准 APPROVAL BY	公差 TOLEANCES	.X± 0.3 .XX± 0.15	角度 ANGLE 1°	单位 DIMENSION UNIT mm.			
			绘图 DRAWN BY	李双	设计 DESIGNED BY	李双	比例尺 SCALE	1:1	品名 TITLE	图号 DRAWING NO	材质 MATERAL	处理 FINISH
			核对 CHECKED BY	李新超	核准 APPROVED BY	李新超	日期 DATE	2006 08 17	MR-1-110-CXN-BB			