http://www.reicon.com.cn

PROPRIETARY INFORMATION

THIS DRAWING IS THE PROPERTY OF REICON ENCLOSURES. DISCLOSURE OR REPRODUCTION OF THE INFORMATION ON THIS DRAWING IS PROHIBITED WITHOUT PRIOR WRITTEN CONSENT OF REICON ENCLOSURES.

REVISIONS

E.C.O.	ZONE	REV.	DESCRIPTION	DATE	BY

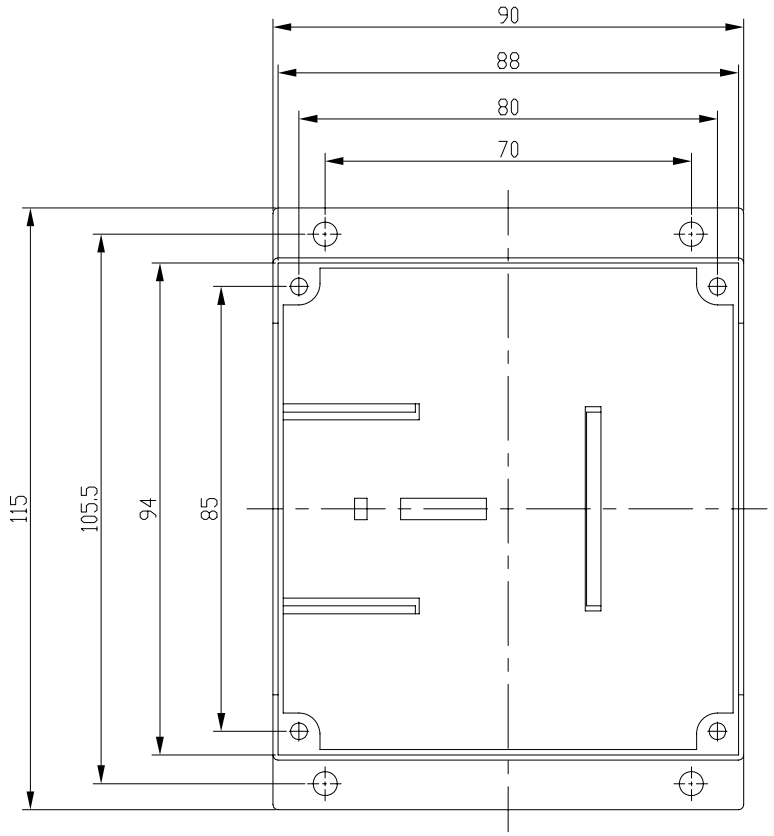

Inside view of base

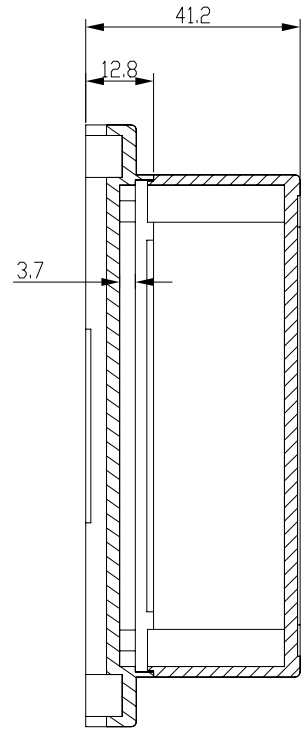

Side section view

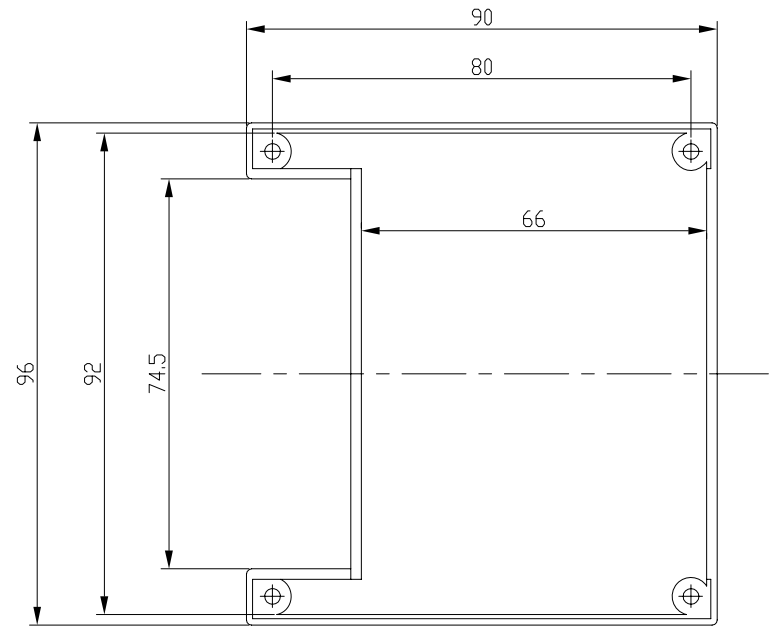

Inside view of cover

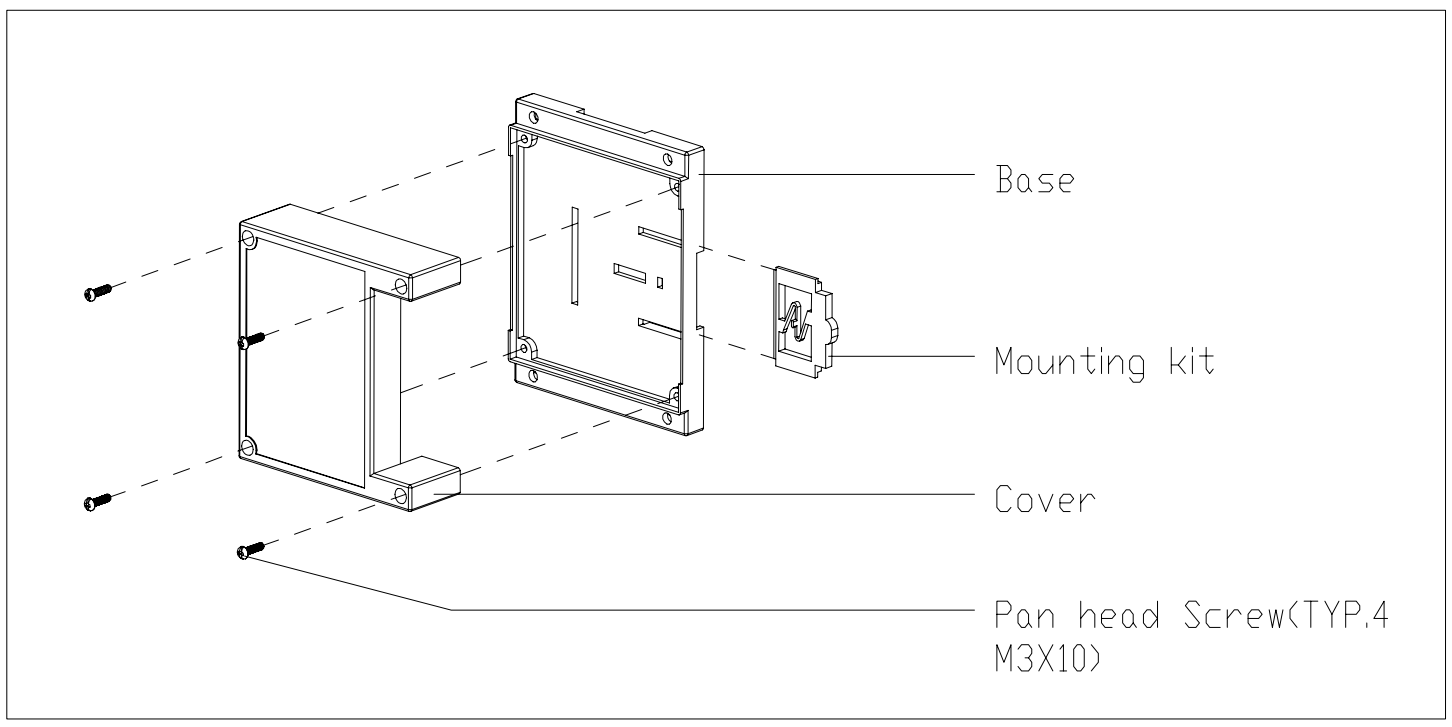

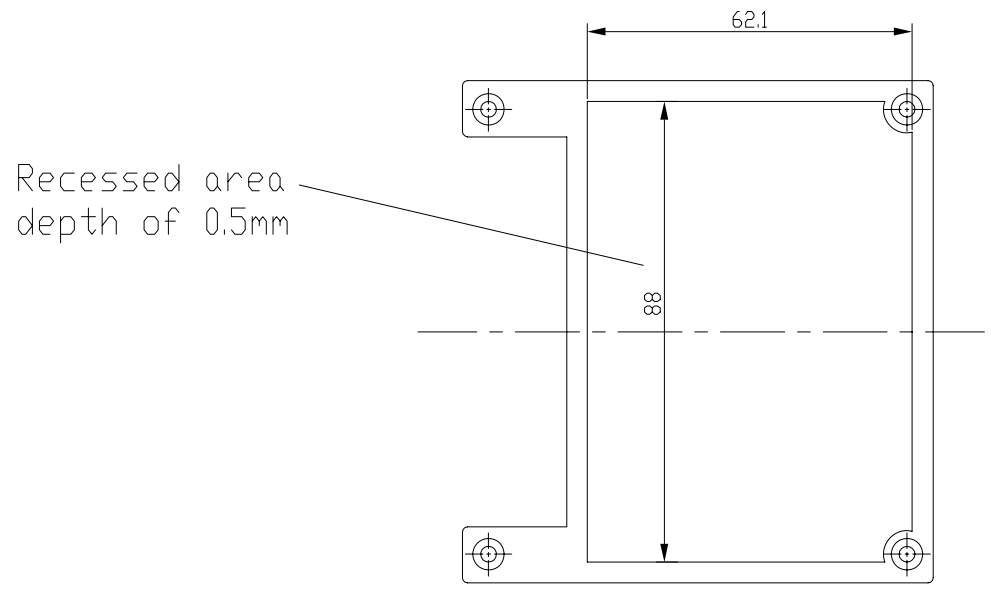

Top view of cover

http://www.reicon.com.cn	MATERIAL ABS	APPROVALS	DATE	北京瑞康电子设备有限公司 BEIJING REICON ELECTRONICS EQUIPMENT CO., LTD.
		DRAWN		
		CHECKED		
	COLOR BEIGE	CUSTOMER		TITLE DIN RAIL ENCLOSURE
DO NOT SCALE DRAWING 部分图元可能未按比例绘制	THIS DRAWING IS ONLY FOR YOUR REFERENCE 图上尺寸仅供参考，请以实际产品为准	DIMENSIONS ARE IN MM		DWG. NO. 06.034A / REV.
				PROJECTION TYPE / SHEET 1 OF 1 / SIZE A2