ISSUE	AMENDMENT	DATE

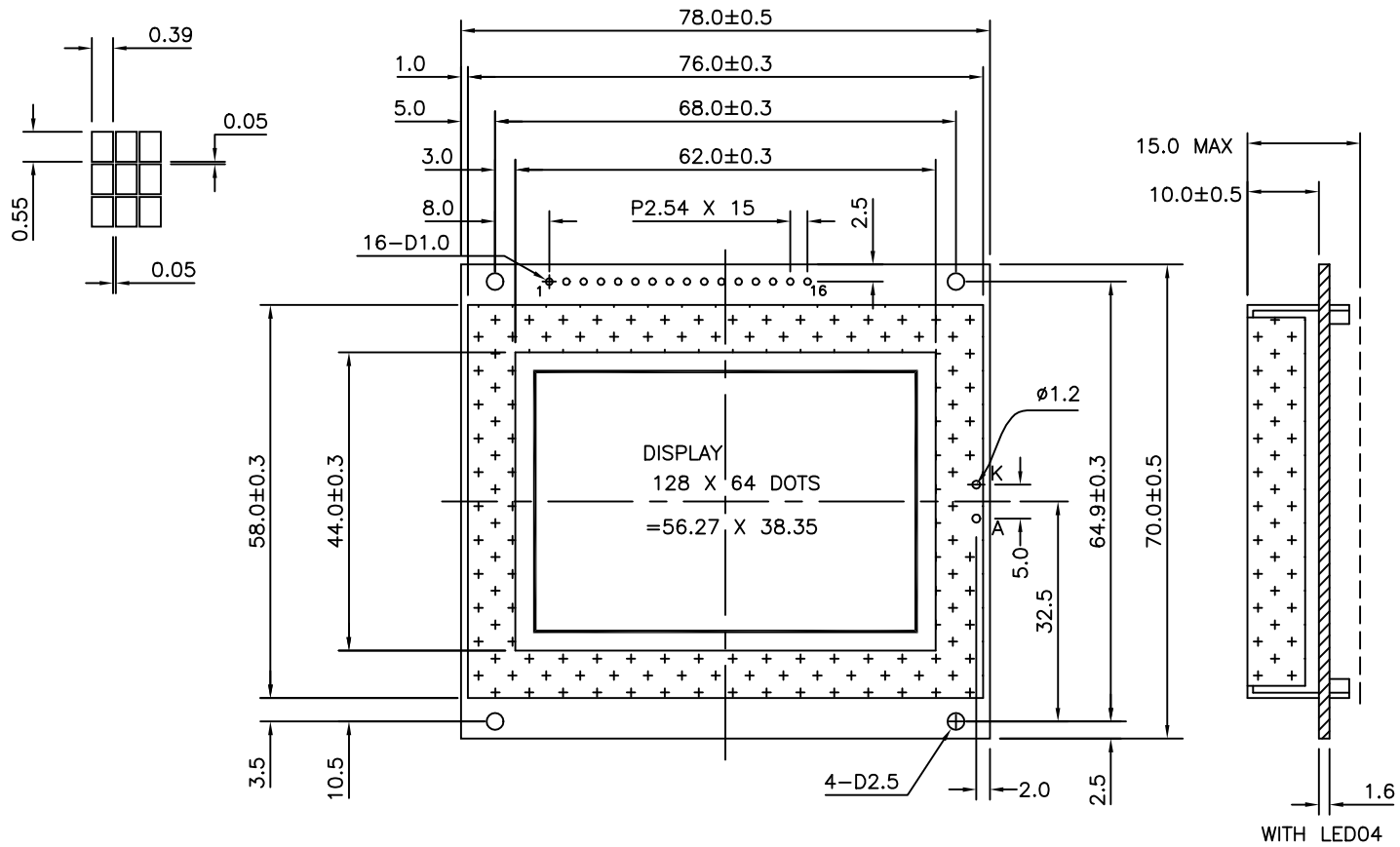

18 PIN CONNECTION	1	2	3	4	5	6	7	8	9	10	11	12	13	14	15	16	17	18
	/CSA	/CSB	VSS	VDD	Vo/POFF	D/I	R/W	E	DB0	DB1	DB2	DB3	DB4	DB5	DB6	DB7	LED+	LED-

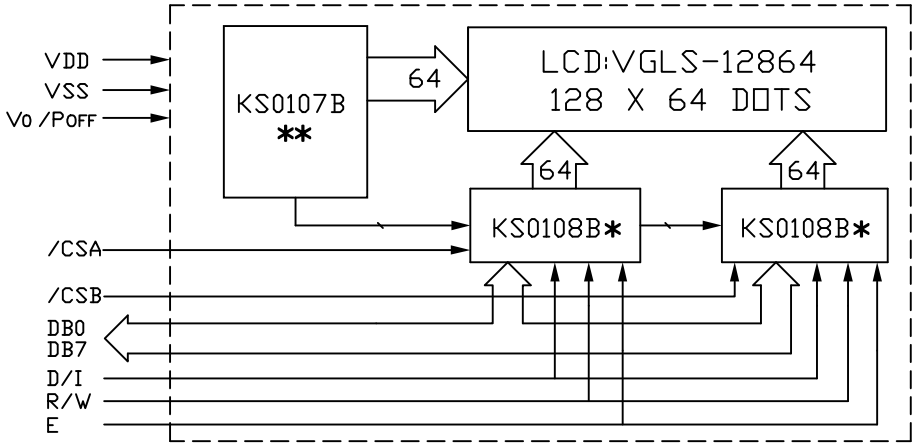

** OR EQUIVALENT

VARITRONIX LIMITED

TITLE: SPECIFICATION OF MODULE			
PROJECT NO: VP12864			
TOLERANCE UNLESS OTHERWISE SPECIFIED:	X.X ±0.3 X.XX ±0.1		
DIMENSIONS IN MM			
MATERIAL:	FINISH:		
SCALE: NOT ON SCALE	THICKNESS:		
THIRD ANGLE PROJECTION			
	NAME	SIGE	DATE
DRAWN	TEE TAI LIAN		01.06.20
CHECKED	DANNY CHAN		
APPROVED	ANDY LEUNG		
ITEM NO. VP12864-01			
DESCRIPTION: VP12864-HT-LED04			
FILE NO: VP12864-01_R1_Module			REV 0
SHEET 1 OF 1			