深圳市宏聚电子有限公司 ORIENT ELECTRONIC CO., LTD.

Model No.	Switching position		
T8011	ON	none	ON
T8011A	ON	none	ON
T8012	ON	OFF	ON
T8012A	(ON)	OFF	(ON)
T8012B	ON	OFF	(ON)
Term. Comm.	2-3	open	2-1, 5-4
3 Way switches (SP3T)			
T812	ON	ON	ON
T812B	ON	ON	(ON)
Term. Comm.	2-3, 5-6	2-3, 5-4	2-1, 5-4

SPECIFICATIONS

- CONTACT RATING: 5A @120VAC or 28VDC (Q contact)
- ELECTRICAL LIFE: 50000 make-and-brak cycles at full load
- CONTACT RESISTANCE: 10mΩ max. initial @2-4VDC, 100mA
- INSULATION RESISTANCE: 1000 MΩ min.
- DIELECTRIC STRENGTH: 1500 V RMS @sea level.
- OPERATING TEMPERATURE: -30° C to 85° C

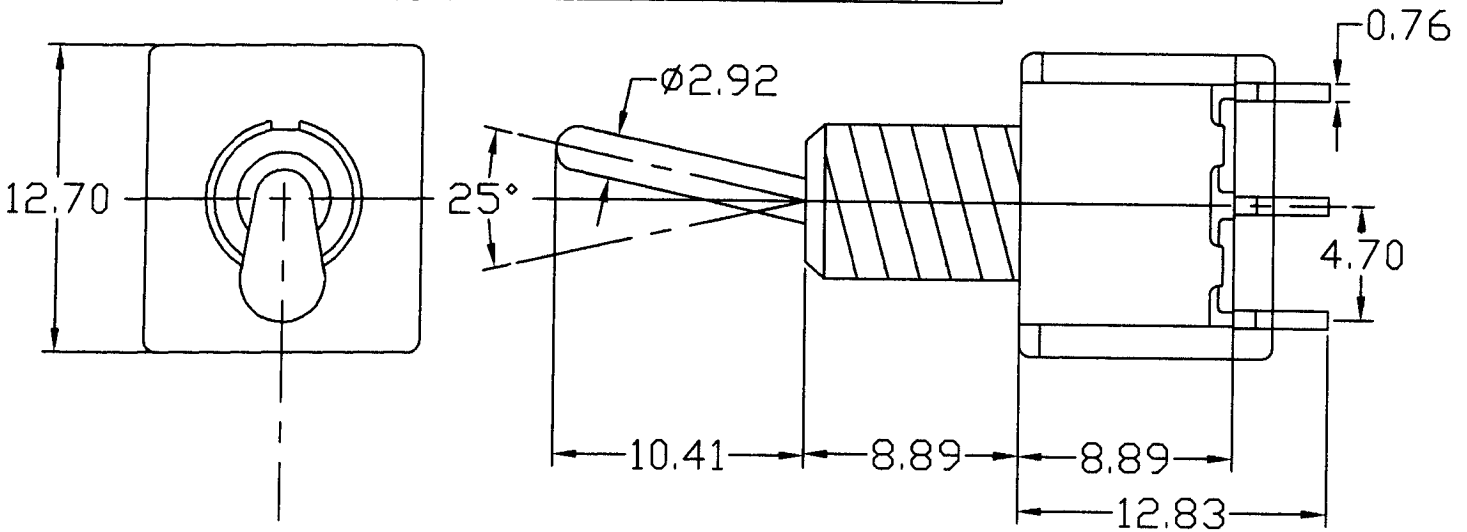

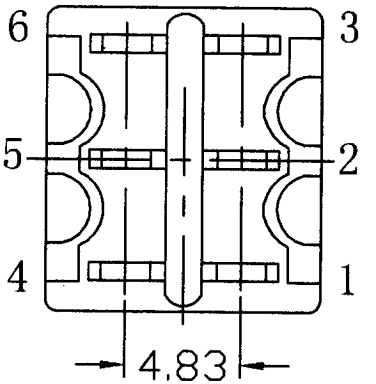

SWITCHING CIRCUIT

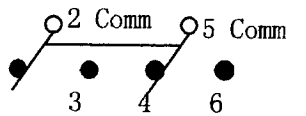

修正 REVISION	说明 DESCRIPION	核准 APPROVAL BY	公差 TOLEANCES		X 0.		.XX 0.05	角度 AMGLE $\frac{1}{2}''$	单位 DIMENSION UNIT mm.			
			绘图 DRAWN BY	雷云霞 2/7-03	设计 DESIGNED BY		比例尺 SCALE		品名 TITLE	图号 DRAWING NO.	材质 MATERIAL	处理 FINISH
			核对 CHECKED BY		核准 APPROVED BY		日期 DATE		T8011-SEBQ			