MARK 記号	REVISION 来歴	DATE 年月日	SIGN 担当	APP. 承認

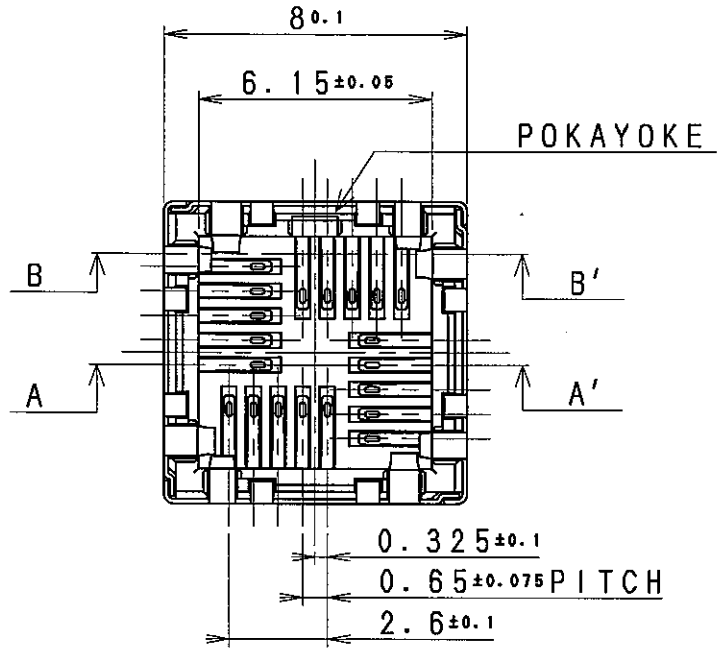

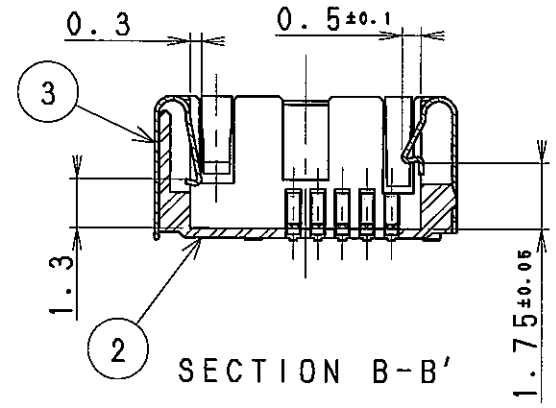

NOTE
1. SPECIFICATION:CLE9120B1001F
2. PACKAGING:CLE9120N1001F
3. COPLANARITY
   CONTACT, SHIELD
   ALL 0.1 COPLANARITY TO DATUM A

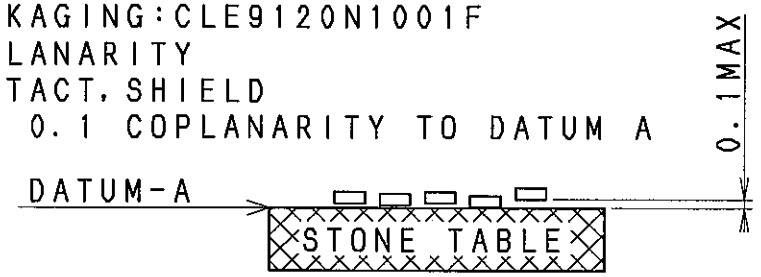

4. CENTERING CONTROL WITH ASSEMBLING MODULE X-Y ±0.05mm
5. ROTATION CONTROL MAX 1 DEGREE
6. TILTING MAX 1 DEGREE

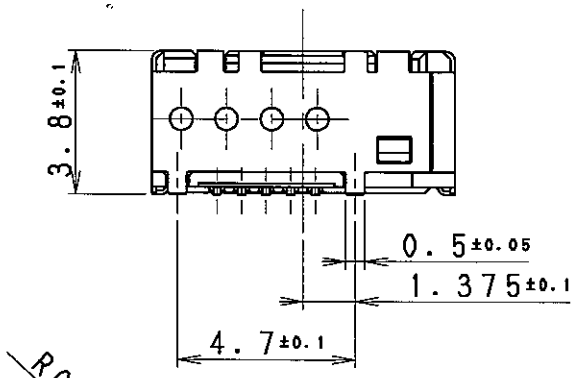

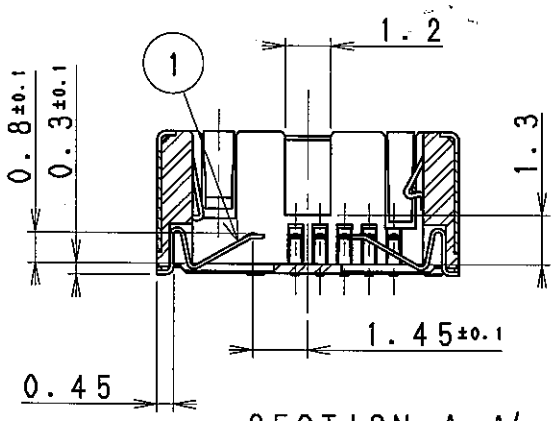

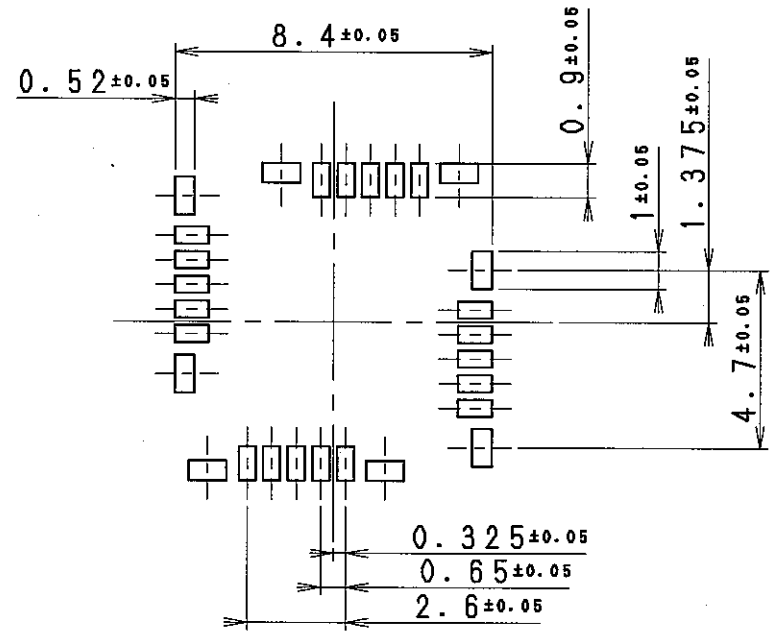

RECOMMEND P.C. BOARD LAYOUT

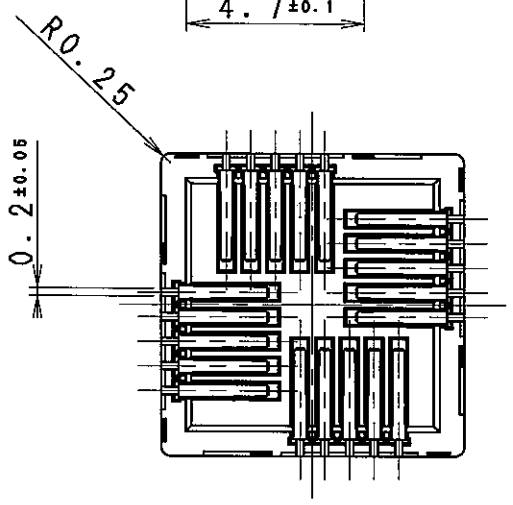

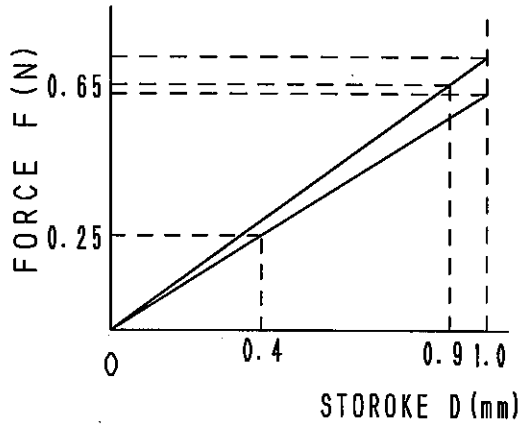

CONTACT FORCE

ITEM 部番	PART NO. 図番	NAME 名称	MATERIAL 材質	FINISH 処理	Q'TY 員数	NOTE 備考
3	801CLE-044-30F	SHIELD	Cu ALLOY t=0.12	Sn PLATING	4	
2	415CLE-128-50F	CONTACT	Cu ALLOY t=0.10	Au PLATING	20	
1	101CLE-106-00F	HOUSING	LCP (GF30%)	BLACK	1	

15 DIMENSIONS RANGE	TOLERANCE UNLESS SPECIFIED
0.5≦X< 1	±0.15
1≦X≦ 6	±0.20
6<X≦ 18	±0.30
18<X≦ 50	±0.50
50<X≦120	±0.70
120<X≦250	±0.90
250<X≦500	±1.20

UNIT 単位: mm
SCALE 尺度: 5:1
APPROVED 承認: 29.APR.05
CHECKED 検図: 27 Apr '05 J. Hakogyuchi
TRACED 写図:
DESIGNED 設計: 26. APR. '05 S. Uruwashi
DESCRIPTION 名称: CAMERA MODULE CN 3226 SOCKET (0.65mm PITCH 20P FOR 6X6 MODULE)
ISSUED 出図:
DRAWING NO. 図番: CLE9120-1001F

SMK M-CADAM

T-39-50240 P-390191 M

SMK CORPORATION