NOTES:MATERIAL & FINISH

1 HOUSING:HIGH-TEMPERATURE THERMOPLASTIC UL94V-0
COLOR:WHITE

2 ACTUATOR:HIGH-TEMPERATURE THERMOPLASTIC UL94V-0
COLOR:BLACK

3 CONTACT:COPPER ALLOY
PLATING:GOLD FLASH OR TIN(LEAD FREE) OR MATTE-TIN PLATED

△4 ORDER INFORMATION: 6600X- X XX N- 07 X

PACKING: E: TUBE
R: PLASTIC REEL
△L: PAPER REEL

TYPE
STANDARD

PIN NO.

PLATING: E: TIN(LEAD FREE)
G: GOLD FLASH
Q: MATTE-TIN(LEAD FREE)

6600:0 3 ZIF FPC SMT R/A B/C
6600K:0.3 ZIF FPC SMT R/A B/C (HALOGEN FREE)

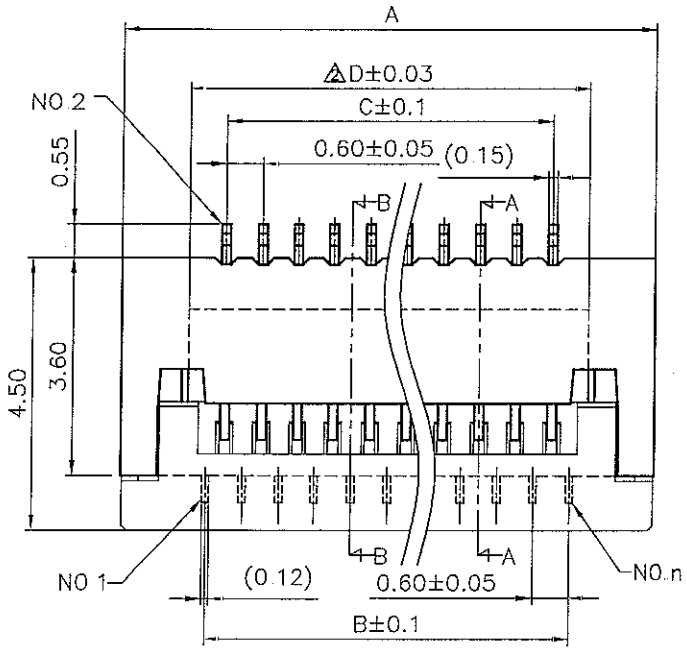

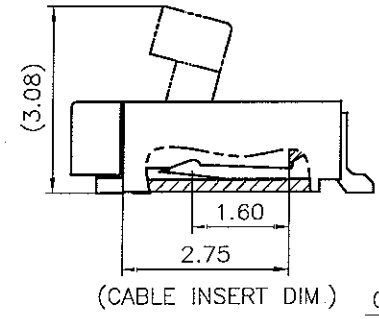

(CABLE INSERT DIM.)

SECTION A-A

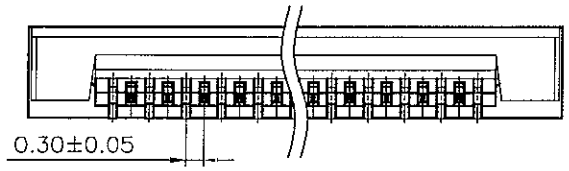

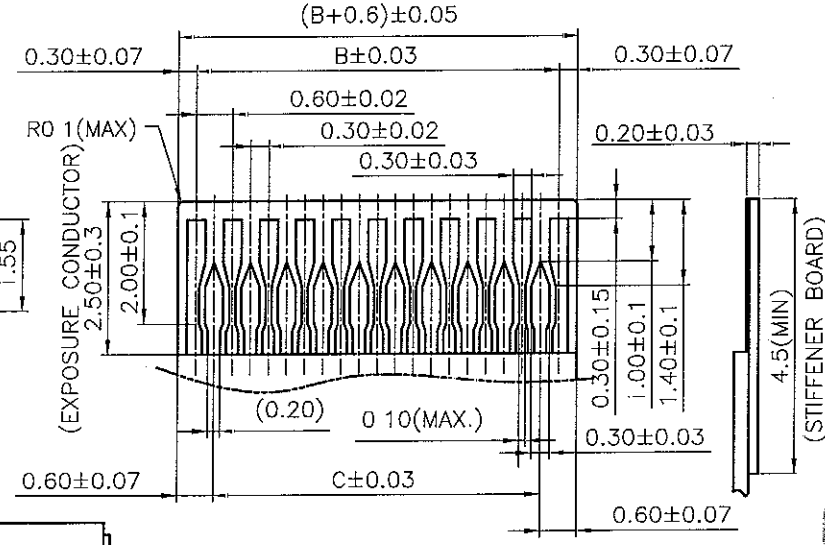

APPLICABLE FPC
△RECOMMENDED DIMENSION

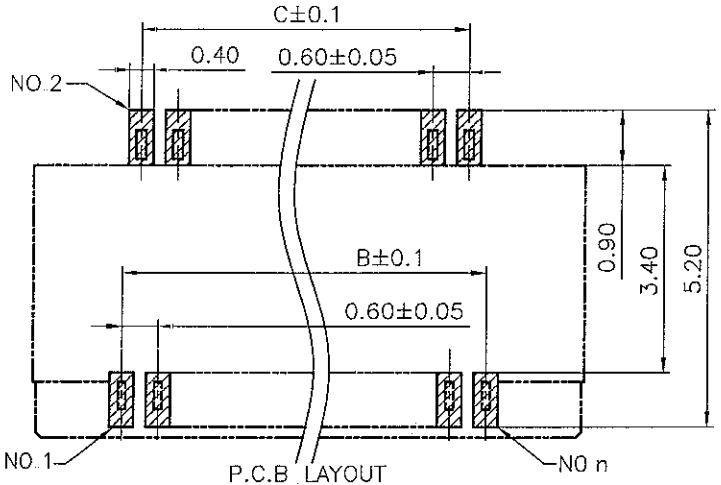

P.C.B LAYOUT

TOLERANCE : ±0.05

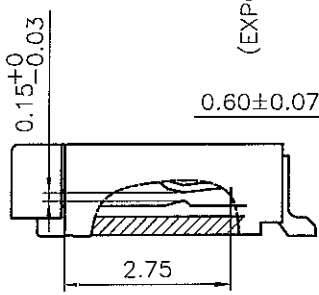

(CABLE INSERT DIM.)

SECTION B-B

PIN	A	B	C	D
05	4.0	1.2	0.6	1.83
07	4.6	1.8	1.2	2.43
09	5.2	2.4	1.8	3.03
11	5.8	3.0	2.4	3.63
13	6.4	3.6	3.0	4.23
15	7.0	4.2	3.6	4.83
17	7.6	4.8	4.2	5.43
19	8.2	5.4	4.8	6.03
21	8.8	6.0	5.4	6.63
23	9.4	6.6	6.0	7.23
25	10.0	7.2	6.6	7.83
27	10.6	7.8	7.2	8.43
29	11.4	8.4	7.8	9.03
31	12.0	9.0	8.4	9.63
33	12.4	9.6	9.0	10.23
35	13.0	10.2	9.6	10.83
37	13.6	10.8	10.2	11.43
39	14.2	11.4	10.8	12.03
41	14.8	12.0	11.4	12.63
43	15.4	12.6	12.0	13.23
45	16.0	13.2	12.6	13.83
47	16.6	13.8	13.2	14.43
49	17.2	14.4	13.8	15.03
51	17.8	15.0	14.4	15.63
53	18.4	15.6	15.0	16.23
55	19.0	16.2	15.6	16.83
57	19.6	16.8	16.2	17.43
59	20.6	17.4	16.8	18.03
61	20.8	18.0	17.4	18.63

恩得利工業股份有限公司 發行章 99.6.18 R&D 研發工程處

SER	REVISIONS	CHK	DATE
△3	RE201006019	MAX	06/17/10'
△2	RE200909009	HUNTER	09/08/09'
△1	REN90512	JOAN	05/21/09'

CUSTOMER

GENERAL TOLERANCE UNLESS OTHERWISE SPECIFIED
X.X ±0.25
X.XX ±0.20
X.XXX
ANG ±0°30

E&T 恩得利工業股份有限公司
ENTERY INDUSTRIAL CO., LTD.

DRAWN: HUNTER MAN-06-2009
CHECKED:
APPROVED: 6/17/10

PART NO △ 6600X-XXXN-07X

TITLE: 0.3 ZIF FPC SMT R/A B/C

SHEET 1/1 | UNIT MM | SCALE 8:1 | SIZE A4 | B D