REV.	DESCRIPTION	DRAWN	CHECKED	APPROVED
A	NEW RELEASE			

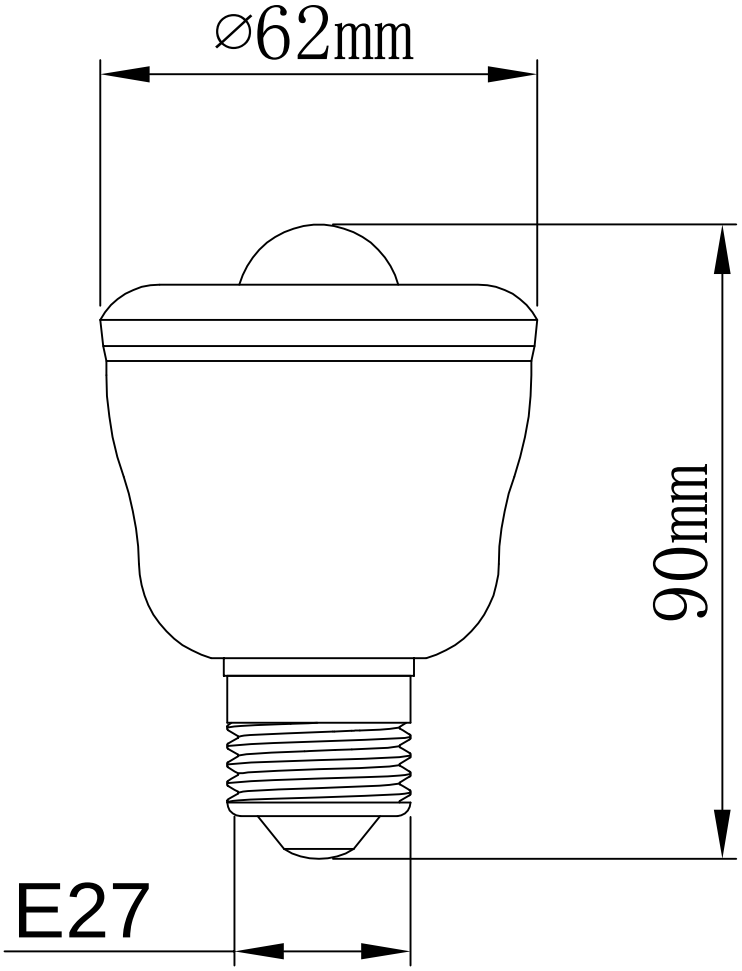

GENERAL TOLERANCE		ANGLE TOLERANCE		PROJECTION		PR-3528G30	
X.	±0.60	X.	±5°	UNITS	mm		
.X	±0.38	.X	±3°	SHEET SIZE	A4	SERIES	
.XX	±0.25	.XX	±2°				
DRAWING TYPE	CUSTOMER			宁波普锐电子科技有限公司			
SCALE	1:1	SHEET		NingBo Prime Electronic Technology Co.,Ltd			
DRAWING NO.							