PB-05A	ON-OFF
PB-05B	OFF-(ON)
PB-05C	ON-(OFF)

Rating: 1.5A 250VAC
3A 125VAC
Contact Resistance: 50mΩ (initial)

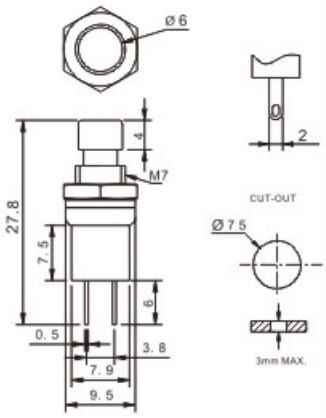

PB-01-PP-R	OFF-(ON)

Rating: 3A 125VAC
1.5A 250VAC
Contact Resistance: 50mΩ (initial)

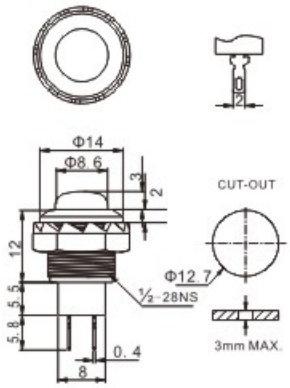

R13-508L	ON-OFF
R13-508	OFF-(ON)

Rating: 3A 125VAC
1.5A 250VAC
Contact Resistance: 50mΩ Max (initial)

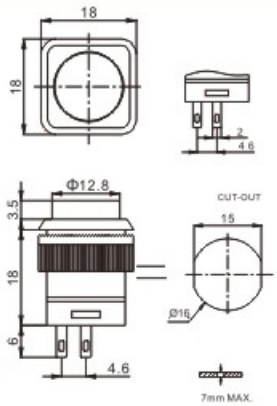

PB-01-MM-R	OFF-(ON)

Rating: 3A 125VAC
1.5A 250VAC
Contact Resistance: 100mΩ (initial)

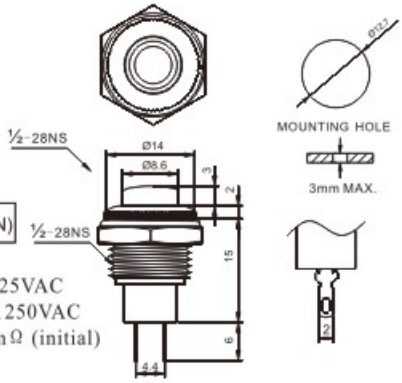

PB-02-PM-R	OFF-(ON)

Rating: 6A 125VAC
Contact Resistance: 100mΩ (initial)

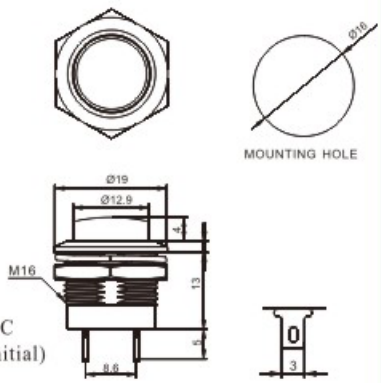

PB-02-MM-G	OFF-(ON)

Rating: 6A 125VAC
Contact Resistance: 100mΩ (initial)

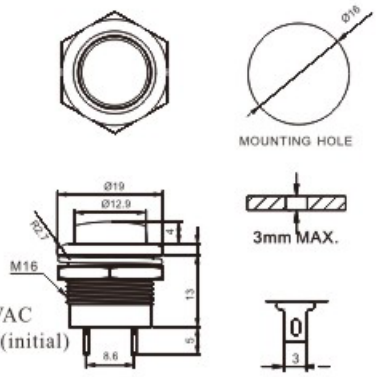

PB-02A-MR	OFF-(ON)

Rating: 5A 250VAC
Contact Resistance: 20mΩ Max

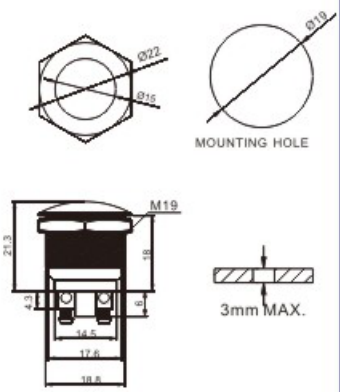

PB-02A-MF	OFF-(ON)
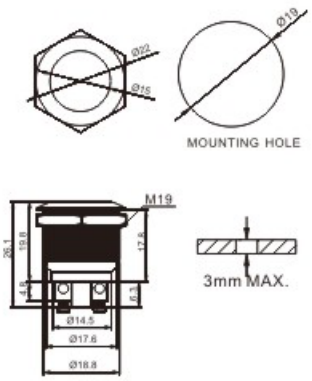
Rating: 5A 250VAC
Contact Resistance: 20mΩ Max