△數	訂正記事	組審者	年 月 日	承認者
△1				
△2				
△3				
△4				

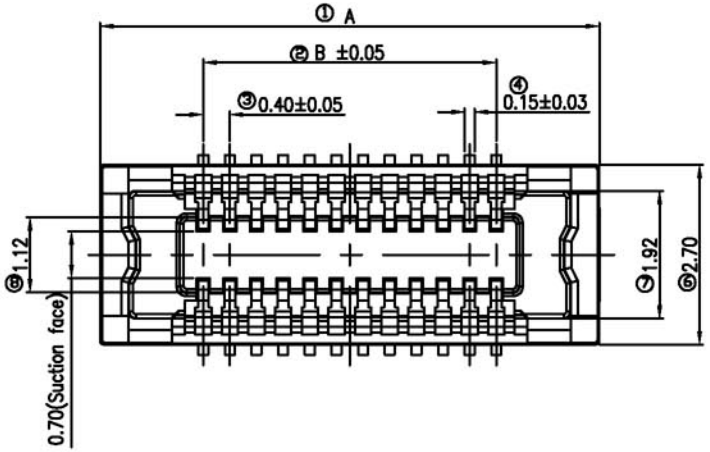

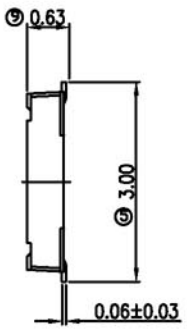

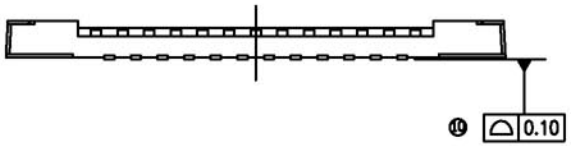

NOTES：

1. Housing material：Heat resistant plastic UL94V-0, Black
2. Termimal material：Copper Alloy
3. Terminal plated：Gold plating over all,
   Nickel((Min 40μ") plating over all
4. Part No. : ASE3SXX10

Contacts No.

Matting drawing

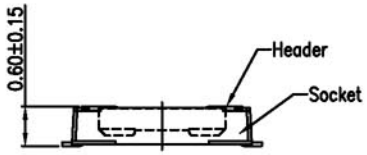

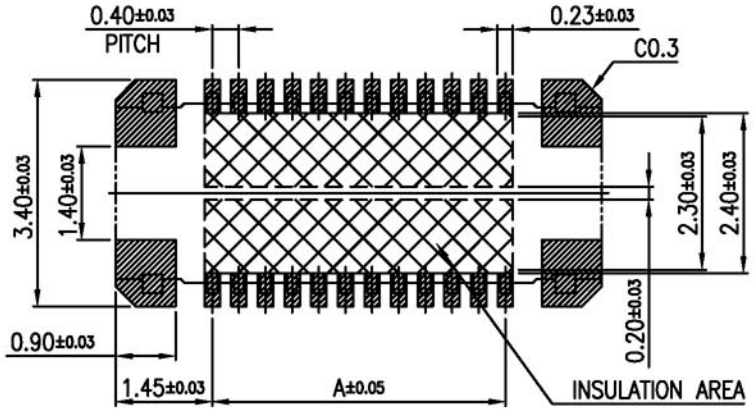

Recommended PC board pattern
(mounting pad layout)

Dimension table (mm)

No. of contacts	Dimension A	Dimension B
20	6.70	3.60
24	7.50	4.40
30	8.70	5.60
40	10.70	7.60
50	12.70	9.60
60	14.70	11.60
70	16.70	13.60
80	18.70	15.60

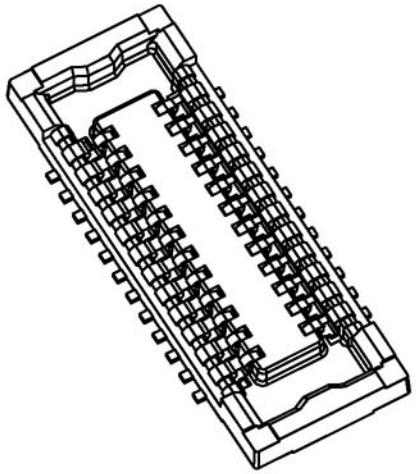

ATC ASSEM TECHNOLOGY CO., LTD.			TITLE	0.4mm Pitch BOARD TO BOARD MATED HEIGHT 0.60mm SOCKET CONNECTOR			
DRAWING	JERRY	MATERAL	Heat resistant plastic (94-V0)	P / N	ASE3S * * 10	REV.	A
CHECKED	BERLIN	DRAWING NO.		TOLERANCE UNLESS OTHER WISE SPEC.		DATE : 2011/3/7	
APPROVED	JACK	APPROVED	UNIT mm	General tolerance: ±0.2			

	△數	訂正記事	組審者	年 月 日	承認者
4					
3					
2					
1					

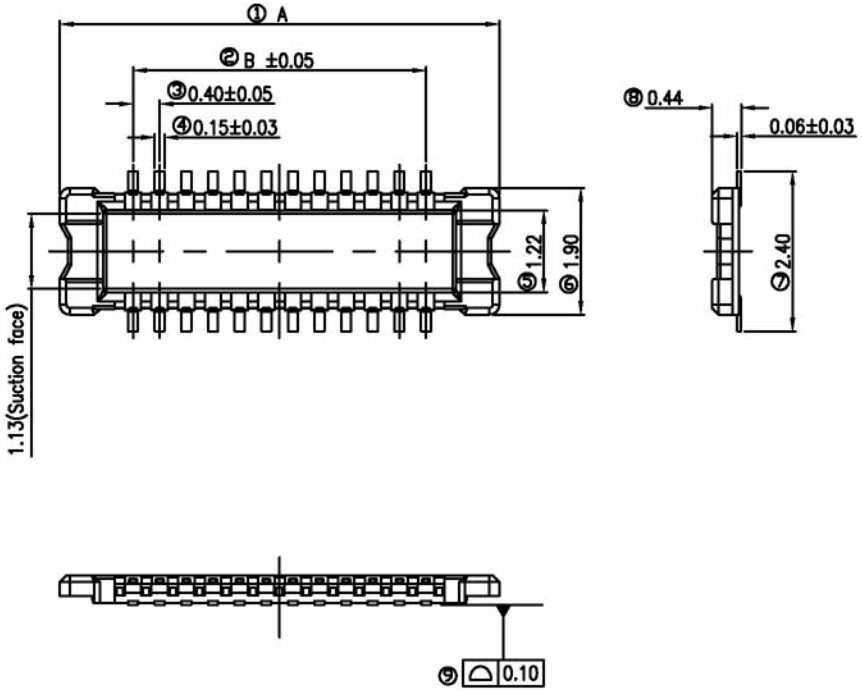

NOTES：

1. Housing material：Heat resistant plastic UL94V-0, Black
2. Termimal material：Copper Alloy
3. Terminal plated：Gold plating over all,
   Nickel((Min 40μ") plating over all
4. Part No. : ASE4HXX10

Contacts No.

Matting drawing

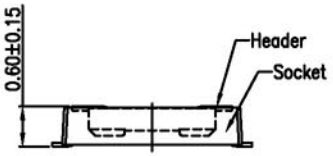

Dimension table (mm)

No. of contacts	Dimension A	Dimension B
20	5.80	3.60
24	6.60	4.40
30	7.80	5.60
40	9.80	7.60
50	11.80	9.60
60	13.80	11.60
70	15.80	13.60
80	17.80	15.60

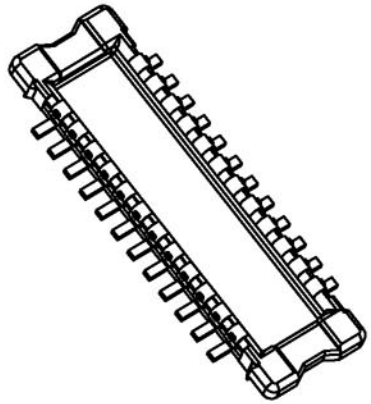

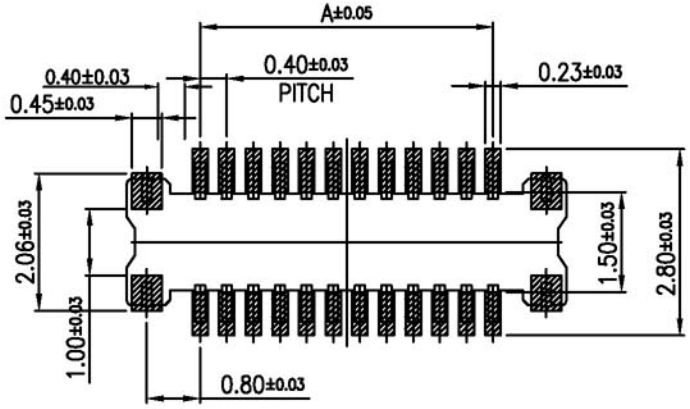

Recommended PC board pattern
(mounting pad layout)

ATC ASSEM TECHNOLOGY CO., LTD.			TITLE	0.4mm Pitch BOARD TO BOARD MATED HEIGHT 0.60mm HEADER CONNECTOR			
DRAWING	JERRY	MATERAL	Heat resistant plastic (94-V0)	P / N	ASE4H ＊ ＊ 10	REV.	A
CHECKED	STING	DRAWING NO.		TOLERANCE UNLESS OTHER WISE SPEC.		DATE : 2011/3/7	
APPROVED	JACK	APPROVED	UNIT mm	General tolerance： ±0.2			