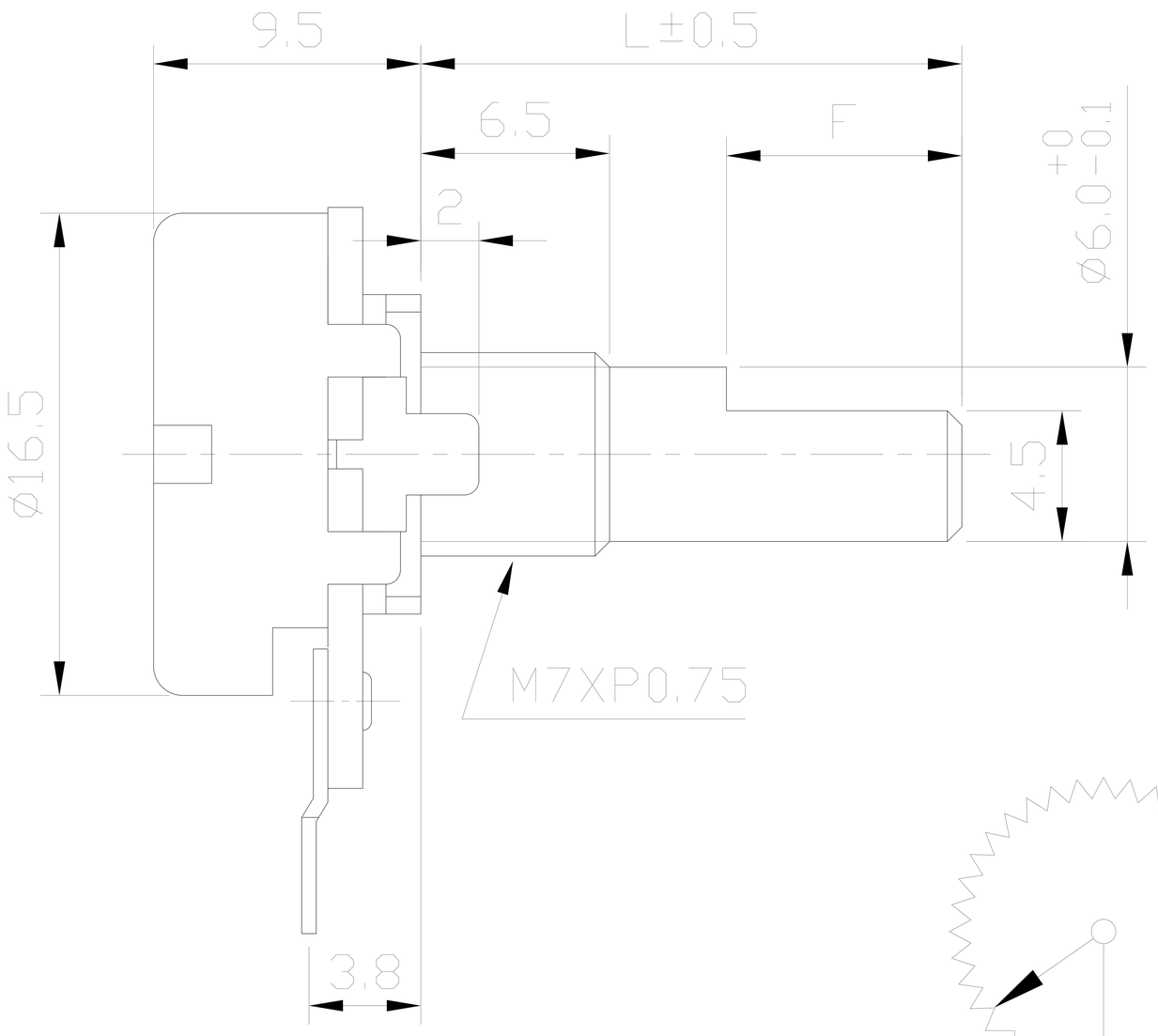

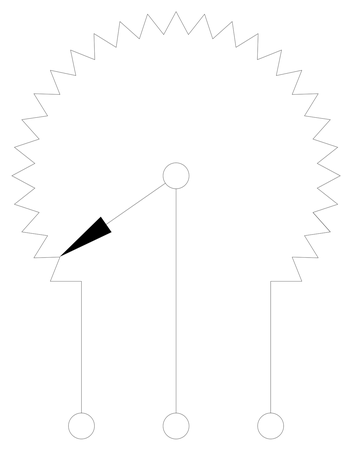

1 2 3

CIRCUIT

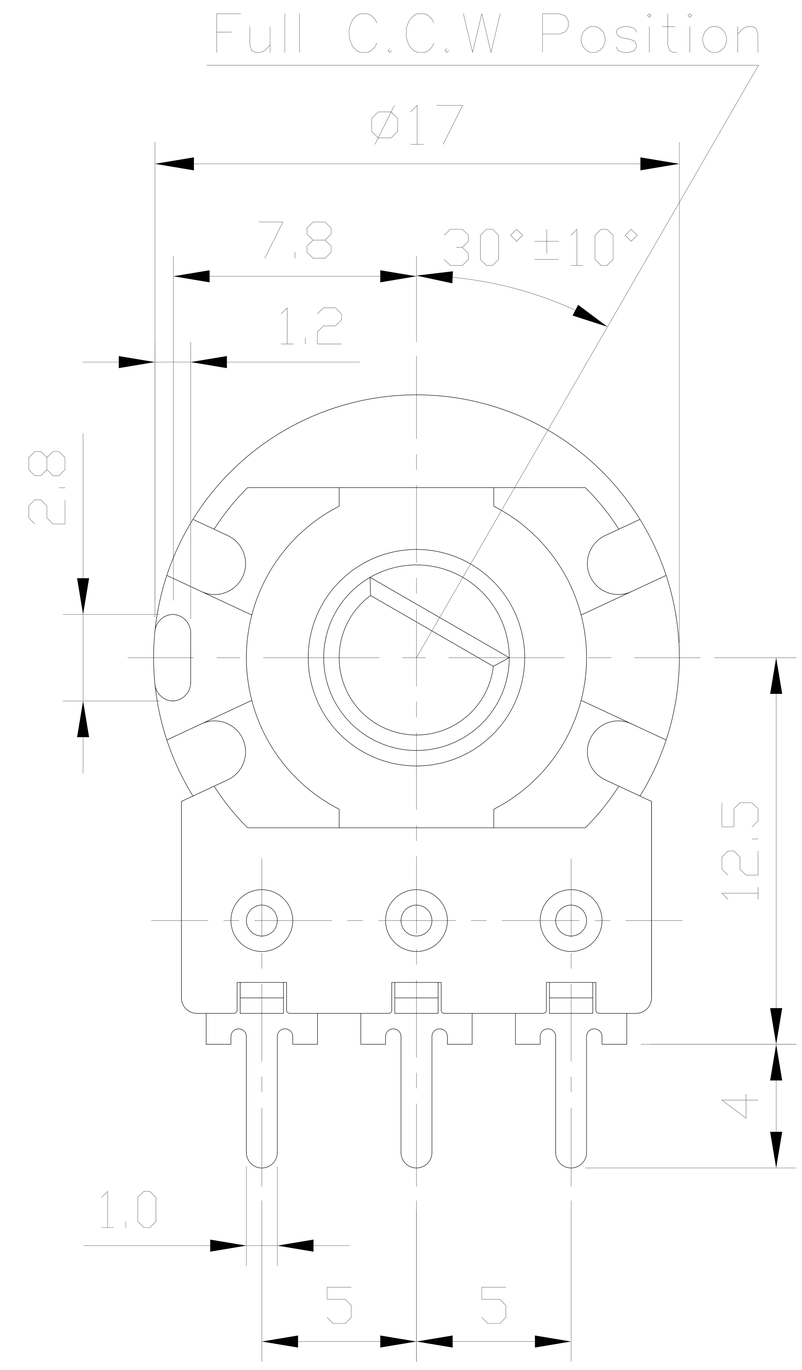

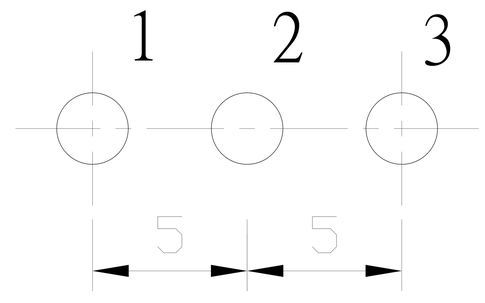

L	12	13.5	15	20	25
F	4	4.5	7	12	12